FT

GB

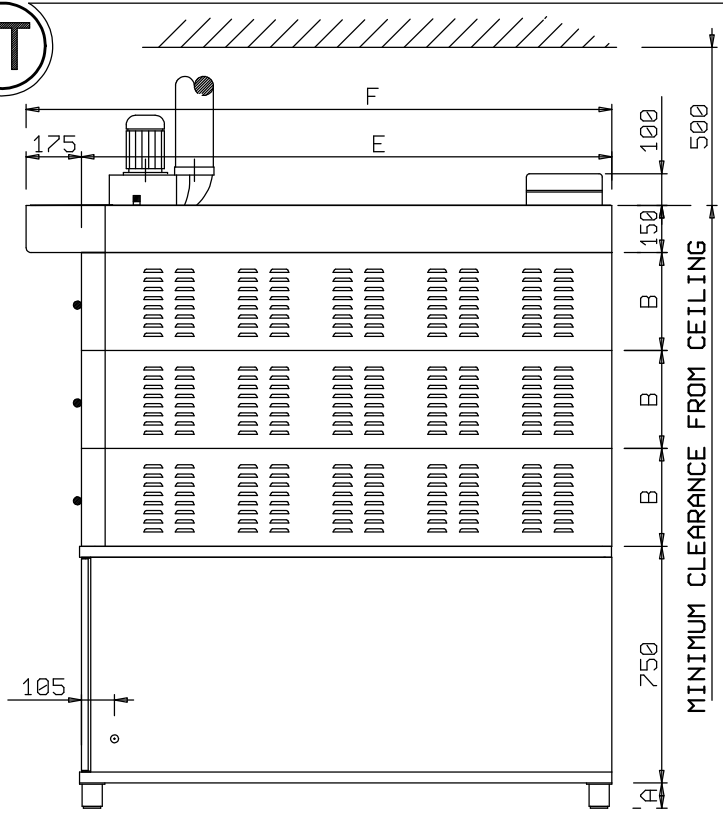

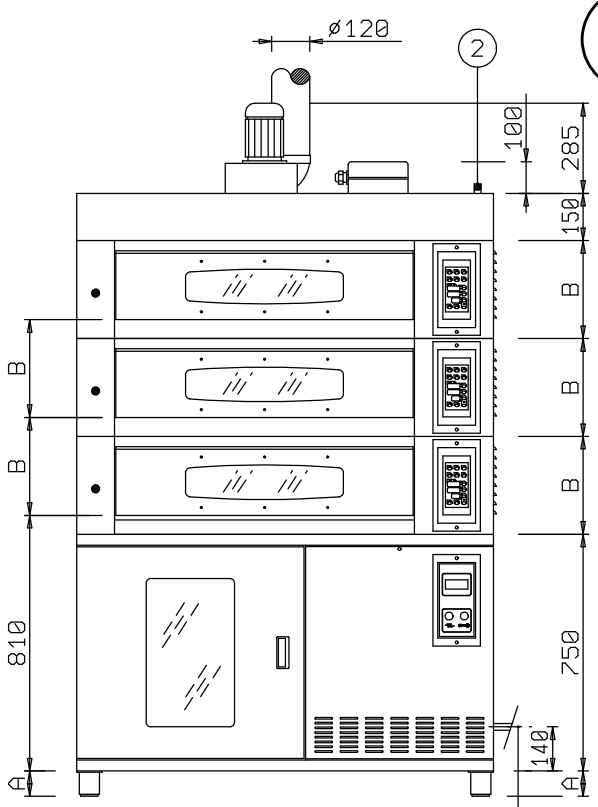

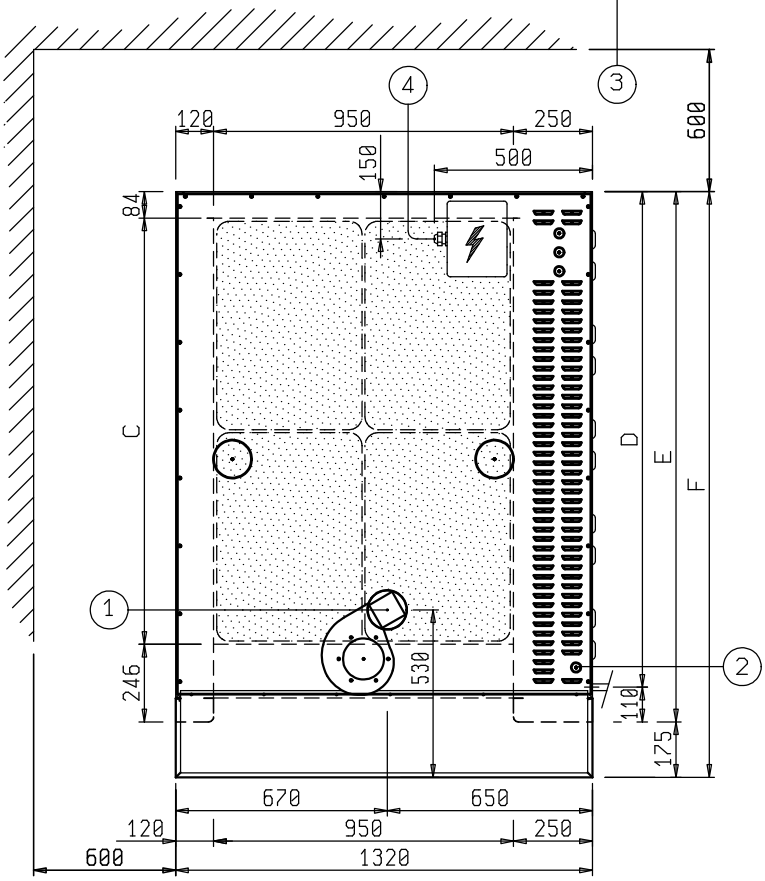

OVEN TYPE	A
1 CHAMBER	190
2 CHAMBERS	190
3 CHAMBERS	80

PANS 46X66			
C	D	E	F
1350	1570	1680	1855

PANS 46X76			
C	D	E	F
1550	1770	1880	2055

USEFUL H.	180	230	280
B	310	360	410

TECHNICAL FEACTURES	WITH ECONOMIZER	/
INSTALLED POWER FOR SINGLE CHAMBER (KW)	4,3 KW	8,5 KW
AVERAGE CONSUMPTION FOR SINGLE CHAMBER	5 KW/H	
INSTALLED POWER PROOFER	0,5 KW	
AVERAGE CONSUMPTION PROOFER	0.5 KW	
ELECTRIC POWER FOR STEAM GENERATOR FOR SINGLE CHAMBER	1 KW	
USEFUL DIMENSIONS BAKING CHAMBER	950 X C	
MINIMUM PASSAGE FOR DISSEMBLED OVEN	800 X 1350	

1	STEAM EXAUST PIPE	ø120
2	WATER ARRIVAL	ø1/2"
3	WATER DISCHARGE	ø1/2"
4	ELECTRIC ENERGY ARRIVAL	

MODULAR OVEN
4 PANS 46X66 - 46X76
WITH PROOFER

DATA	VISTO	DATA
.	.	06.03.07
BOLL.	DIS.	DIS.N°
.	. S.S.	POS/573

Sistema Qualita'

DISEGNO DI PROPRIETA' RISERVATA E NON PUO' ESSERE RIPRODOTTO O MOSTRATO A TERZI AI SENSI DI LEGGE

1-BASE 2-IN